Smithsonian
National Air and Space Museum

Exploring the Planets

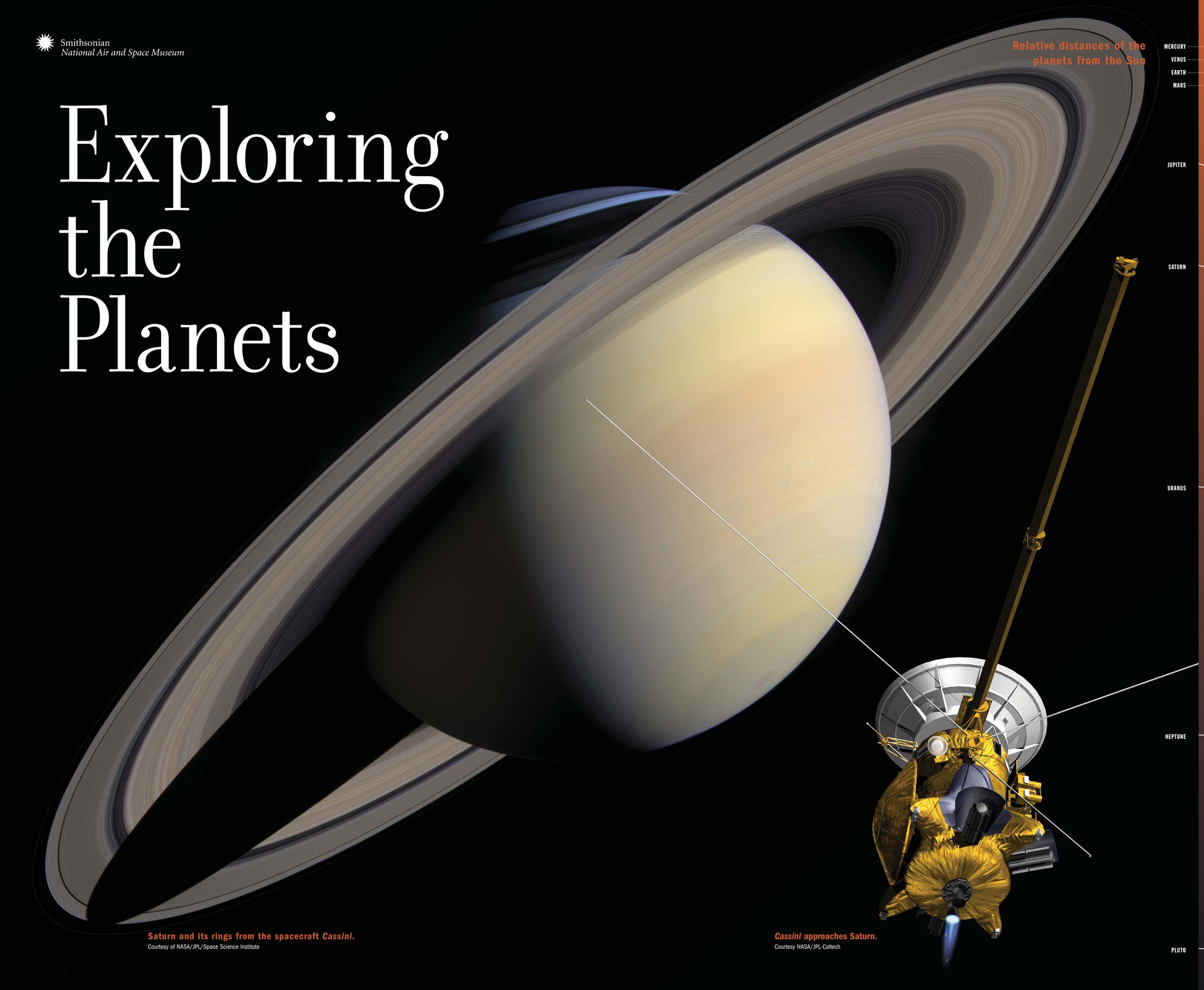

Saturn and its rings from the spacecraft *Cassini*.
Courtesy of NASA/JPL/Space Science Institute

***Cassini* approaches Saturn.**
Courtesy NASA/JPL-Caltech

Exploring the Planets: An Introduction to Planetary Spacecraft

OVERVIEW

This introduction to planetary spacecraft provides an activity that familiarizes students with the robotic spacecraft that make observations of other planets. To help identify these spacecraft, students examine four different spacecraft in line drawings supplied as Blackline Masters. Students observe how the design of important features such as solar panels, sunshades, and antennas enable each spacecraft to carry out its mission in a particular environment, near or far from the Sun. As a culminating activity, students select a planet and design a spacecraft to explore it.

This activity is written for third- through sixth-grade students who are studying the solar system, but older students also can benefit from the activity and the extensions. You are encouraged to visit the National Air and Space Museum in person or on the Web so that you can better anticipate what your students will need to learn and understand. Even if you and your students are unable to visit the Museum, you can still use the poster and the activity as a worthwhile part of your science program.

Grade Level: third through sixth

Time Required: two to four class periods (50 minutes each)

OBJECTIVES

★ Describe how robotic spacecraft have collected information about the planets.

★ Identify differences between spacecraft sent to inner and outer planets.

★ Recognize that robotic spacecraft can provide detailed information about the planets.

EDUCATION STANDARDS ADDRESSED IN THIS ACTIVITY

National Science Education Standards

Unifying Concepts and Processes

★ Form and Function

Understandings About Scientific Inquiry

★ Scientists rely on technology to enhance the gathering and manipulation of data.

Earth and Space Science

★ Objects in the Sky

BENCHMARKS

★ Technology enables scientists and others to observe things that are too small or too far away to be seen without it.

★ Measuring instruments can be used to gather accurate information for making scientific comparisons of objects.

BACKGROUND INFORMATION

How have scientists learned about the solar system? First, they looked up with the unaided eye at night and observed the planets. For a better view, scientists looked through telescopes and saw the rings of Saturn, the Great Red Spot of Jupiter, and the thick clouds of Venus. However, the images offered little detail, and basic questions about the nature of the planets' surfaces remained unanswered. For example, Figure 1 shows a photograph of Saturn made from an Earth-based telescope. This fuzzy image cannot begin to reveal the detailed structure of Saturn's astonishing ring system. Not even the Hubble Space Telescope, from its orbit above Earth's atmosphere, can provide images with as much detail as scientists need.

To overcome the limitations of observation from Earth, scientists and engineers built spacecraft to carry cameras

FIGURE 1

SOURCE: EINSTEIN PLANETARIUM

and other instruments to each planet under study. Called *remote sensing*, this kind of investigation involves gathering information from a distance without actually touching.

The most important observations include information about the following:

- ★ ***Surface features*:** Spacecraft study surface features in two ways. In *active* imaging, the spacecraft sends out radar waves that reflect from the surface and are imaged by the spacecraft. In *passive* imaging, the spacecraft sends out no waves but simply images the reflected radiation from the Sun. Radar images of Venus provided a way to penetrate the dense cloud cover and construct a topographic map of its surface. Rover images taken of Mars and optical images of Mercury and Mars from orbiting spacecraft enabled geologists to study the landforms, processes, and history of these two planets.
- ★ ***Magnetism*:** Spacecraft provide important information about the magnetic field around each planet and enable scientists to draw conclusions about the interior. The *Mars Global Surveyor*—a spacecraft that dipped very close to the planet's surface—found the first evidence of magnetism on Mars. Had the *Mars Global Surveyor* not flown so close to the surface, this magnetism would have remained undetected.
- ★ ***Atmosphere*:** Spacecraft measure the temperature, pressure, and chemical composition of planetary atmospheres. For example, on Venus, the atmospheric pressure at the surface is about 90 times that on Earth, and the temperature is about 490° C (about 900° F).
- ★ ***Gravitational pull*:** The path of a spacecraft through space, particularly when in orbit, provides precise information about the shape of a planet. For example, the orbit and speed of the *Mars Global Surveyor* provided evidence of high and low points on the crust of Mars.

Spacecraft have visited all the planets in our solar system. As for our planet, we have been studying it continuously from space ever since the first satellite, *Sputnik 1*, went into orbit on October 4, 1957. Most famous for its beeping radio transmissions, *Sputnik* also measured the temperature of the surrounding space.

Some spacecraft are put into orbit around other planets. Other spacecraft fly past one planet on the way to another. For example, the *New Horizons* spacecraft heading toward a rendezvous with the dwarf planet Pluto in 2015 has provided images of Jupiter and its moons along the way. In addition, some spacecraft land on a planet's surface. These different paths, as shown in Figure 2, provide the main classification scheme for robotic spacecraft:

- ★ A ***flyby*** passes by a planet without going into orbit (for example, *Voyager*).
- ★ An ***orbiter*** remains in orbit above a planet (for example, *Mars Reconnaissance Orbiter*).

ABOUT THE POSTER IMAGE

The poster features an image of Saturn with an artist's rendering of the spacecraft *Cassini*. The Saturn photo is actually a mosaic of 126 images captured by *Cassini* over two hours on October 6, 2004. Look carefully, and you'll notice:

- ★ subtle color variations in the rings
- ★ the planet's long shadow across the rings on the left
- ★ the shadow from the rings across Saturn's northern hemisphere
- ★ faint bands of color in Saturn's atmosphere.

The scale model of the solar system on the right shows the planets' orbits in correct proportion. To grasp the vast scale of the solar system, keep in mind that Pluto—the dwarf planet at the outermost edge—is about 40 times farther from the Sun than Earth.

★ A ***lander*** lands on the surface (for example, *Viking Lander*).

★ A ***rover***, after landing on the surface, moves about under its own power (for example, the Mars Exploration Rovers: *Spirit* and *Opportunity*). Rovers have helped explore the Moon and Mars. In the case of Venus, some of the *Venera* spacecraft, launched by the then Soviet Union, landed on the planet. But no rover has yet moved over Venus's surface.

Planet	Probe	Type	Dates
Mercury	*Mariner 10*	flyby	1974 and 1975
	MESSENGER	orbiter	2011
Venus	*Mariner 2*	flyby	1962
	Mariner 5	flyby	1967
	Mariner 10	flyby	1974
	Pioneer Venus	orbiter	1978-92
	Magellan	orbiter and radar-mapper	1990-94
Mars	*Mariner 4*	flyby	1965
	Mariner 6	flyby	1969
	Mariner 7	flyby	1969
	Mariner 9	orbiter	1971-72
	Viking 1	lander	1976-83
		orbiter	1976-80
	Viking 2	lander	1976-80
		orbiter	1976-78
	Pathfinder	lander with rover	1997
	Mars Global Surveyor	orbiter	1997-present
	Mars Odyssey	orbiter	2001-present
	Mars Exploration Rovers (*Spirit, Opportunity*)	rovers	2004-present
	Mars Reconnaissance Orbiter	orbiter	2006
Jupiter	*Pioneer 10*	flyby	1973
	Pioneer 11	flyby	1974
	Voyager 1	flyby	1979
	Voyager 2	flyby	1979
	Galileo	orbiter	1995-2003
Saturn	*Pioneer 11*	flyby	1979
	Voyager 1	flyby	1980
	Voyager 2	flyby	1981
	Cassini	orbiter and probe	2004-present
Uranus	*Voyager 2*	flyby	1986
Neptune	*Voyager 2*	flyby	1989

FIGURE 2

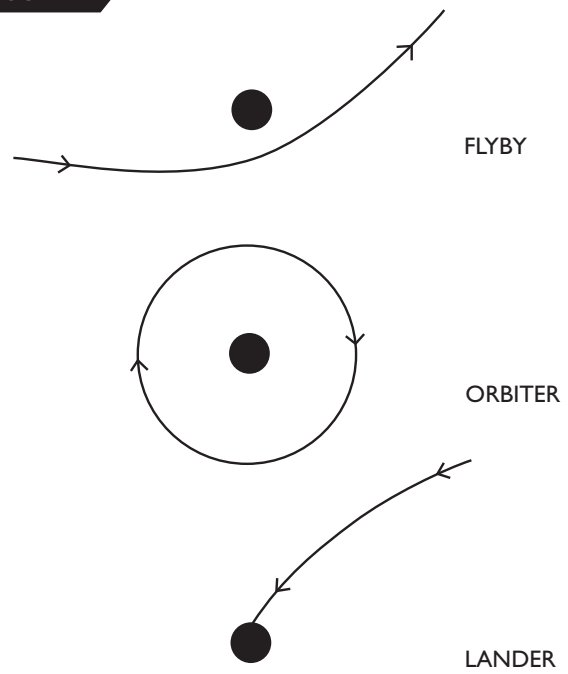

The inner planets—Mercury, Venus, Earth, and Mars—are all terrestrial. The outer planets—Jupiter, Saturn, Uranus, and Neptune—are gas giants with no solid surface. At the outer edge of the solar system is Pluto, which was once categorized as a planet. Now, however, it is classified as a dwarf planet. Pluto orbits in a belt of smaller bodies that never coalesced to form an actual planet. A list of planets and the spacecraft that the U.S. space program has sent to them appears at left.

Both *Voyagers* are still transmitting data more than 25 years after they were launched. The *Voyagers* have been able to function for so long and from such a great distance from the Sun because they rely on Radioisotope Thermoelectric Generators (RTG) to produce electricity. RTGs convert the heat produced by radioactive decay of plutonium into electricity to power instruments and radio transmitters. Most spacecraft sent to the inner planets produce electricity from solar power, since they are close enough to the Sun to convert sunlight to electricity in solar cells mounted on the exterior of the spacecraft.

Spacecraft have given us a wealth of information about our solar system. Future spacecraft will add to our knowledge, with new trips to the Moon, Mars, Mercury, and Pluto already in the works.

MATERIALS

For each student:

★ one copy of each Blackline Master (a total of two)

★ one sheet of unlined paper

For the class:

★ poster

MATERIALS
(For Extension Activities—optional)

For each group of two to four students:

★ compass

★ magnet

★ 2-m strip of adding machine tape

★ meter stick

VOCABULARY

★ atmosphere
★ flyby
★ lander
★ magnetism
★ magnetometer
★ orbit
★ orbiter
★ planet
★ rover
★ solar panel
★ solar system
★ spacecraft
★ thruster

PREPARATION

Copy and collate the two Blackline Masters for each student. Note that a dimension is provided for each spacecraft on the Blackline Masters. Consider how you can help students visualize the size of each craft by holding your hand at the height of the *Viking Lander* or Mars Exploration Rovers. For the much larger *Voyager*, you might point to a comparable area on the classroom wall. A few days before beginning the activity, display the poster and encourage students to take a good look at it.

PROCEDURE

1. Ask how we learn about the planets in our solar system. Try to bring out these responses:

★ ***Observing the night sky with the unaided eye:*** Explain that "unaided" means without a telescope and that telescopes give us a better view of objects in the sky.

★ ***Using a telescope:*** Ask how the view through the telescope is different from just looking up at the sky. (The object looks bigger, closer, and brighter.) You can mention that scientists also observe with a special telescope in space—the Hubble Space Telescope—that is in orbit around Earth. Hubble images are sent to Earth via radio waves.

★ ***Sending a spacecraft:*** Mention that we have sent spacecraft to all the planets, but spacecraft carrying humans have gone only as far as the Moon. You can add that both robotic spacecraft and human-carrying spacecraft contain computers. In a spacecraft with no humans aboard, radio signals from Earth direct the computers. These often are called *robotic* spacecraft, but be careful with this terminology since, unfortunately, it inspires many students to think in terms of androids.

★ ***Sending people to investigate:*** Emphasize that we have sent people in orbit around Earth and the Moon and down to the surface of the Moon, but we have not sent people to any other planets or out of the solar system.

2. Ask the class what people need to survive in space. (You can expect responses such as food, water, heat, and air.) Ask students to compare the cost of sending people into space with the cost of sending a robotic spacecraft. (Since people must be brought back to Earth, as in the Space Shuttle, it is much cheaper to send a robotic spacecraft.) Explain that robotic spacecraft usually do not come back, but send their observations and measurements to Earth by radio.

3. Ask students to name the planets in order from the Sun. (Mercury, Venus, Earth, Mars, Jupiter, Saturn, Uranus, Neptune) Give students the following as a memory aid: ***M**y **V**ery **E**xcited **M**other **J**ust **S**erved **U**s **N**achos*. Ask what students would like to know about the other planets in the solar system. (Answers will vary.)

4. Ask students to look at the image of Saturn on the front of the poster and describe what they observe. (The image shows amazing detail in the rings and shadows cast by sunlight hitting the planet and its rings.)

Mars Exploration Rovers (MER)/Viking Lander

1. Look at the Blackline Master of *Viking Lander* and Mars Exploration Rovers (MER) (both on the same sheet). Explain that these are different rovers that landed on Mars 28 years apart—*Viking* in 1976, and the two MERs in 2004. Have students compare and contrast the rovers.
2. Ask how spacecraft get energy to make measurements and transmit them to Earth. If students say "from batteries," you can ask what happens to batteries over time. (They run down. Their energy is used up.) Ask students if they have seen any devices that use light to produce electricity (light-powered calculators).
3. Ask students what solar panels or solar cells do (make electricity from sunlight). Point out the solar panels on MER. Add that *Viking Lander* produced electricity in a different way (from heat made by radioactivity), so it did not require solar panels.
4. If your students can understand it, explain that the Radioisotopic Thermoelectric Generator (RTG) uses heat produced by the radioactive decay of plutonium to generate electricity for the instruments. You can mention that this process differs from the way nuclear power plants produce electricity.
5. Discuss the four types of spacecraft—rover, lander, orbiter, and flyby. (See "Background Information.") Have students draw and label the path of an orbiter, a lander, and a flyby. As an example, draw a circular orbit around a planet on the blackboard.
6. Point out that spacecraft lift off from Earth on top of powerful rockets that separate after launch. To protect the spacecraft, they are covered by an aerodynamic shroud or placed inside larger spacecraft not shown in the drawings. Explain that the spacecraft contain small rocket engines, called thrusters, which turn the spacecraft so it points in the proper direction. This is a good time to emphasize that robotic spacecraft usually do not come back. Those displayed in the National Air and Space Museum are models or prototypes used for testing.
7. The Mars Exploration Rovers, *Opportunity* and *Spirit*, are robot geologists. Like human geologists, they study rocks and soil. On Mars, the rovers gather information about the rocks and look for signs of past water activity. Point out the robotic arm. It has a Rock Abrasion Tool (RAT) to scrape the surface of rocks and gather rock particles that other instruments on the arm can analyze to determine the mineral content.
8. Point out the cameras mounted on the top of the rover. These stereo cameras, mounted at about the height of a small adult human (1.5 m or 4.9 ft), show what a geologist standing on Mars might see. Point out the dish antenna. Tell students that the antenna sends and receives radio waves to communicate with the team back on Earth. Ask students if they have seen dishes like this somewhere else (satellite dishes).

MESSENGER/Voyager

9. Look at the Blackline Master of *MESSENGER*. Explain that the magnetometer out on the boom will measure the effect of Mercury's magnetism in space. (See "Extensions," paragraph 1.) Mention that the long boom serves to minimize interference from magnets on the antenna and from weak magnetic fields generated by the instruments.
10. Challenge students to fill in the missing labels with the words listed at the left of the Blackline Master. (These are the "sunshade" (which wraps around the body of the spacecraft), "science instruments," and two "solar panels.") Suggest that students refer to the first handout if they need help.
11. Ask how *MESSENGER* gets power to run its instruments (from sunlight collected by the solar panels). Remind students that Mercury is the closest planet to the Sun, and then ask why *MESSENGER* needs a sunshade. (Near the Sun, the light is so bright that the instruments would overheat without protection. The sunshade keeps the instruments and systems at room temperature.)
12. Look at the Blackline Master of *Voyager*. Explain that the *Voyager* spacecraft have visited Saturn, Jupiter, Uranus, and Neptune.

13. Have students compare and contrast *Voyager's* antennas with those on the other spacecraft. (*Voyager* has a dish antenna like the *Viking Lander* and MER. However, *Voyager's* dish is extremely large (13 feet wide) because the planets it visited are so far away that a big antenna was needed to send and receive signals. The dishes, called high-gain antennas, send a narrow "beam" of information directly to antennas on Earth. MER, *Viking*, and *MESSENGER* also carry low-gain antennas that send a much broader radio beam that Earth stations can pick up even when the beam is not pointed at Earth. *MESSENGER* also has new fan-beam, or medium-gain, antennas that transmit information on the status of the flight and receive operating commands from Earth.)
14. Point out the power source, which looks like several cans fastened together. Explain that *Voyager* needed an RTG (Radioisotopic Thermoelectric Generator) instead of solar panels because it traveled so far from the Sun.
15. Have students label the parts listed at the left of the handout.

REFLECTION AND DISCUSSION

Compare and contrast the spacecraft that go to planets close to the Sun (Mercury) with those that go to planets far from the Sun (Saturn and Neptune). (Solar power versus RTG; a smaller dish antenna versus a large dish antenna or no dish).

ASSESSMENT

Tell students that they will now use what they have learned to design a spacecraft to visit a planet of their choice. Give each student a sheet of unlined paper, and explain that he or she will make a labeled drawing. Ask students to write a paragraph for other students to read that tells about their spacecraft, how it was designed, and what it might discover.

EXTENSIONS

Give each group of two to four students a compass. Ask what they observe. (The compasses point in the same direction—north.) Then give each group a magnet, and ask how the magnet changes what the compass shows. (The compass points toward the magnet.) Explain that the magnetometer in a spacecraft (like *Voyager*) enables scientists to investigate the magnetism of a planet. You can explain that the magnetometer is placed on a long boom because the radio antenna contains magnets, which would interfere with the magnetometer's measurements if the magnetometer and antenna were too close.

Hand out a 2-m strip of adding machine tape and a meter stick to each group of two to four students, so the students can make a large scale model of the distances in the solar system. Here are the distances they will need, all measured from the Sun, which is near the left end of the tape.

Sun:	Near the left end of the tape
Mercury:	1 ½ cm
Venus:	3 cm
Earth:	4 ½ cm
Mars:	7 cm
Jupiter:	23 cm
Saturn:	43 cm
Uranus:	86 cm
Neptune:	135 cm

You might double or triple each measurement and have a group of students make one very large scale model that they can hang horizontally along a wall. Then other students can add drawings of each planet under the corresponding mark on the tape. In addition, you can mention that the solar system is so large that light, which could go eight times around Earth in 1 sec, takes 5 ½ hr to go from the Sun to the outer edge of the solar system (and about 8 min to go from the Sun to Earth).

Have students bring in pictures of airplanes. Ask them how the shape of airplanes differs from that of spacecraft. (The outside surfaces of airplanes are smooth and rounded, so they can cut through the air easily. This kind of shape is streamlined. Spacecraft move through outer space, where there is no air, so there is no need to make them streamlined.)

RESOURCES FOR TEACHERS

Books

The Cambridge Guide to the Solar System by Kenneth R. Lang.

Encyclopedia of the Solar System edited by P. Weissman, L. McFadden, and T. Johnson.

A Field Guide to the Stars and Planets by Jay M. Pasachoff (author), Wil Tirion (illustrator), Roger Tory Peterson (series editor).

The New Solar System edited by J. K. Beatty, C. Peterson, and A. Chaikin.

Planets: A Smithsonian Guide by Thomas R. Watters.

Web Sites

See the "On the Web Site" section of this poster for information related to planets and planetary probes on the National Air and Space Museum's Web site.

To learn more about planetary missions, visit the NASA Web site at **http://solarsystem.nasa.gov/missions/**. At this site, select "missions," and then select the spacecraft or planet you want to explore.

National Air and Space Museum
7th and Independence Ave., SW, Washington, DC 20560

VISITING THE NATIONAL AIR AND SPACE MUSEUM AND THE STEVEN F. UDVAR-HAZY CENTER

National Mall Building in Washington, DC

The Smithsonian National Air and Space Museum maintains the largest collection of historic aircraft and spacecraft in the world. The Museum is open from 10:00 a.m. to 5:30 p.m. daily.

Steven F. Udvar-Hazy Center in Chantilly, Virginia

The companion facility to the National Air and Space Museum, the Udvar-Hazy Center provides space for thousands of aviation and space artifacts that could not be exhibited on the Mall. The Center is open from 10:00 a.m. to 5:30 p.m. daily.

Guided tours and science demonstrations are available free of charge for school groups. Advance registration is required. For more information on school programs or to schedule an "Exploring the Planets" tour, visit the Museum's Web site at **http://www.nasm.si.edu/**. Navigate to "Education."

During the tour, students will learn about other planets and spacecraft, such as *Viking* and *Pioneer*. The tour includes a look at a full scale model of a Mars Exploration Rover.

ON THE WEB SITE

For more information about the spacecraft on exhibit at the National Air and Space Museum, visit the "Exhibitions" section of the museum's Web site at **http://www.nasm.si.edu/**. Navigate to "Exhibitions" and then to the following galleries: *Milestones of Flight, Exploring the Planets,* and *Looking at Earth*. For other Web sites on planetary missions, go to "Research." Then select "Earth and Planetary," and go to "Links."

***MESSENGER* is going to Mercury.**

The distance between the outer edges of *MESSENGER's* solar panels is about 4 m (13 ft.).

Label these parts:
- ⋆ sunshade
- ⋆ solar panels (2)
- ⋆ science instruments

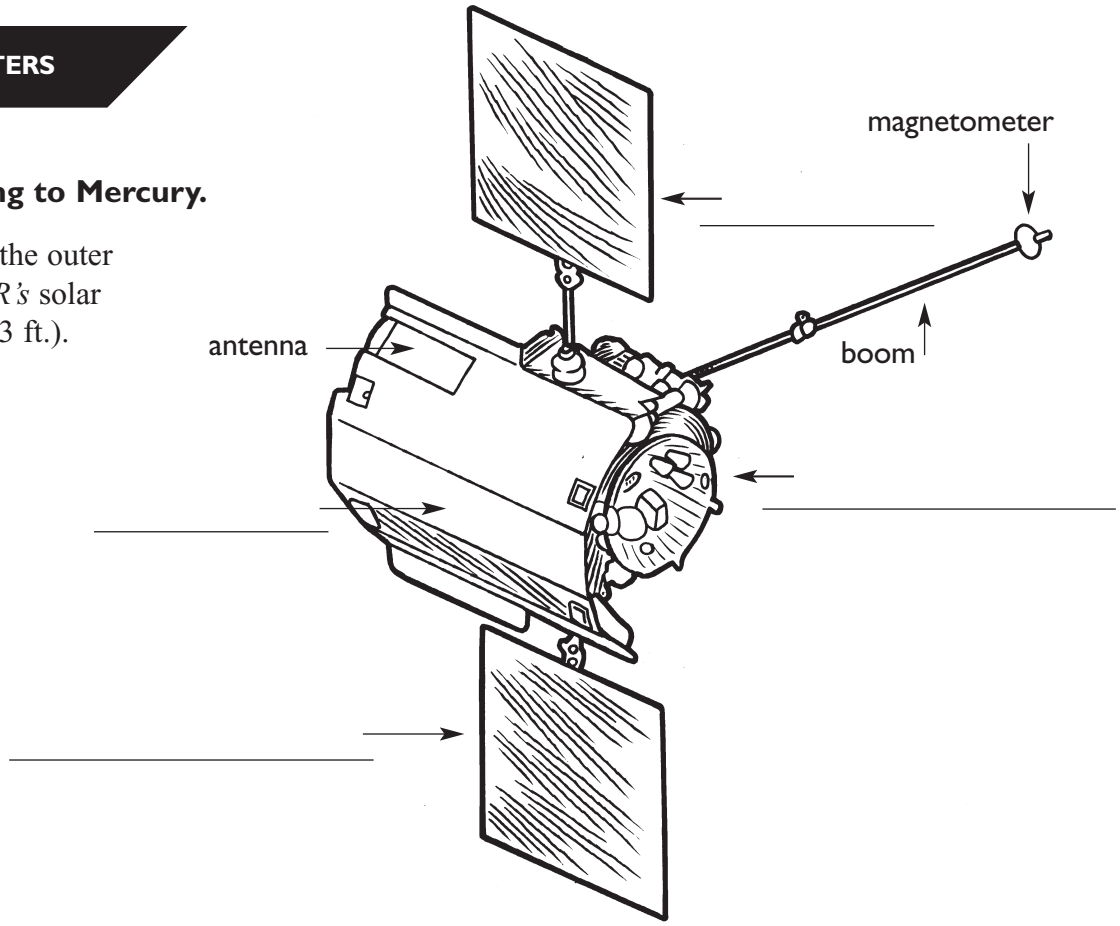

***Voyager 2* went to Jupiter, Saturn, Uranus, and Neptune.**

The diameter of *Voyager 2*'s dish antenna is about 4 m (13 ft.).

Label these parts:
- ⋆ boom
- ⋆ cameras
- ⋆ dish antenna

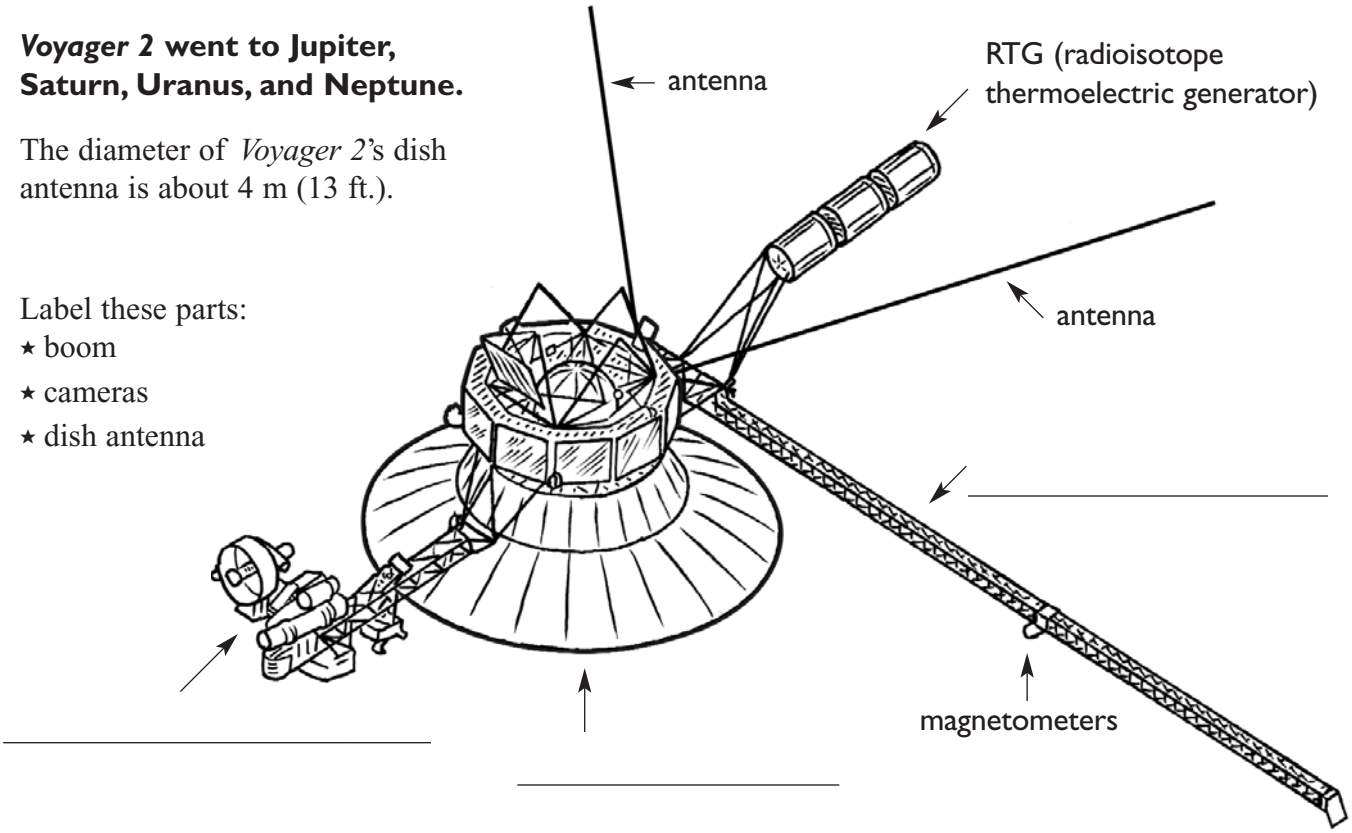

***Viking Lander* went to Mars.**

The height of the *Viking Lander* is about 2 m (7 ft.).

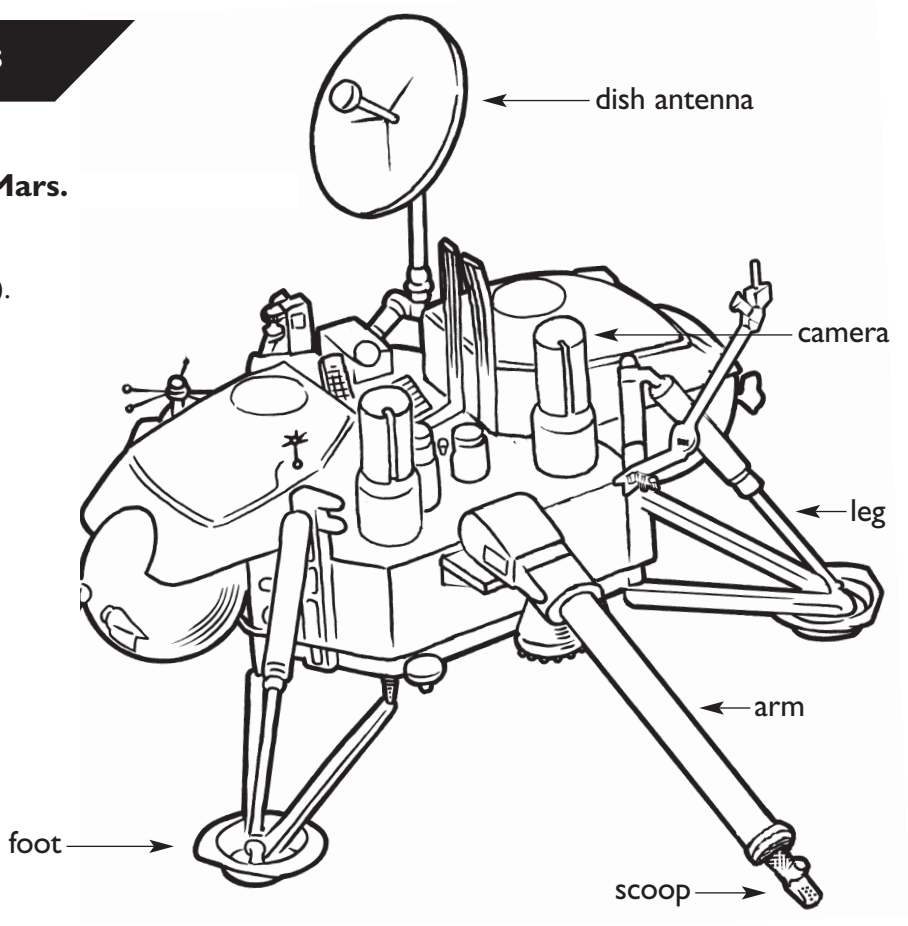

Mars Exploration Rovers *Spirit* and *Opportunity* went to Mars.

The height of the Mars Exploration Rovers is about 1.5 m (5 ft.).